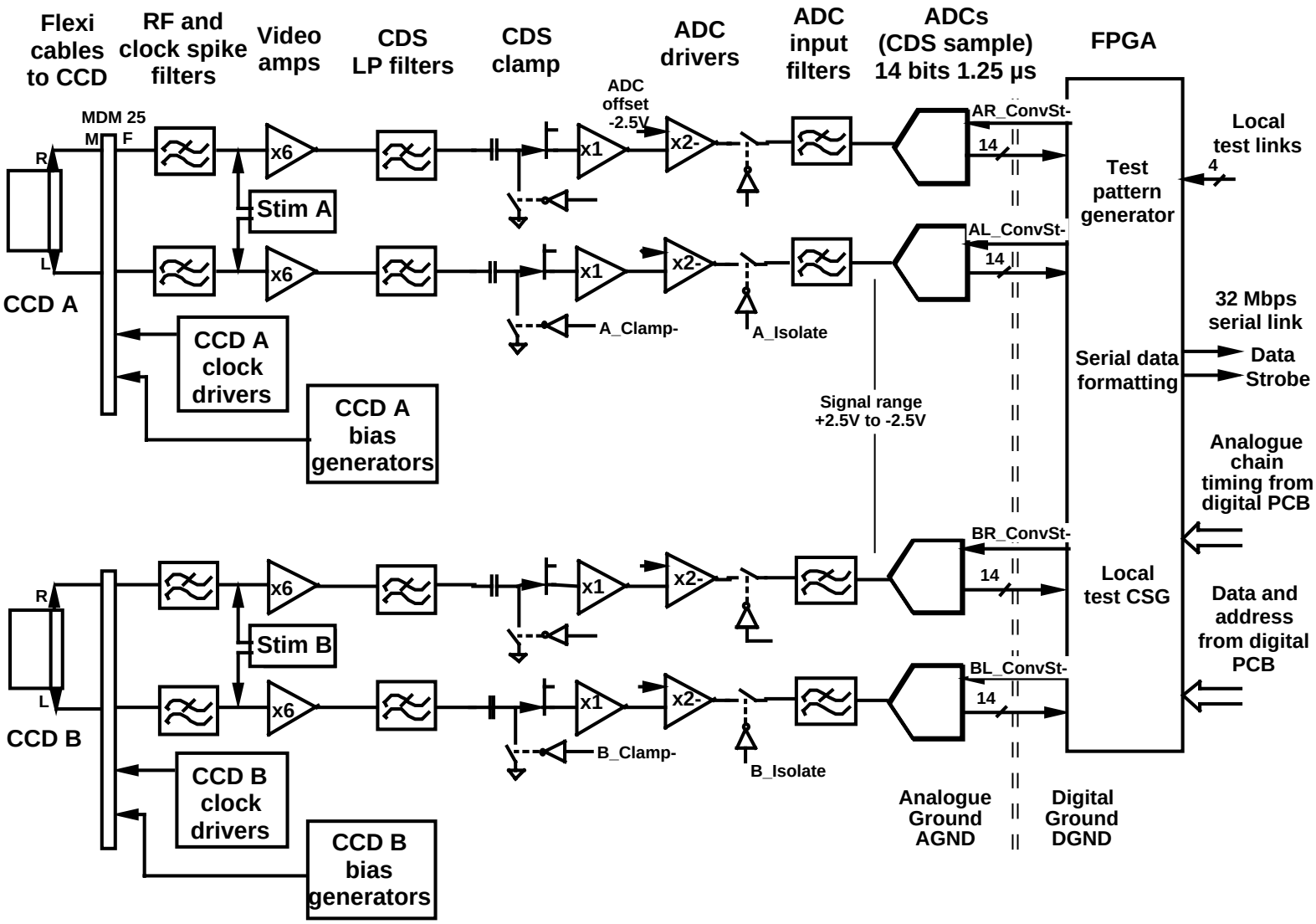

MSSL/SLB-EIS/DD/022.01 ROE Analogue PCB Block Diagram